Product description

symbol: 30303A
Category: Single - row metric size

Technical data
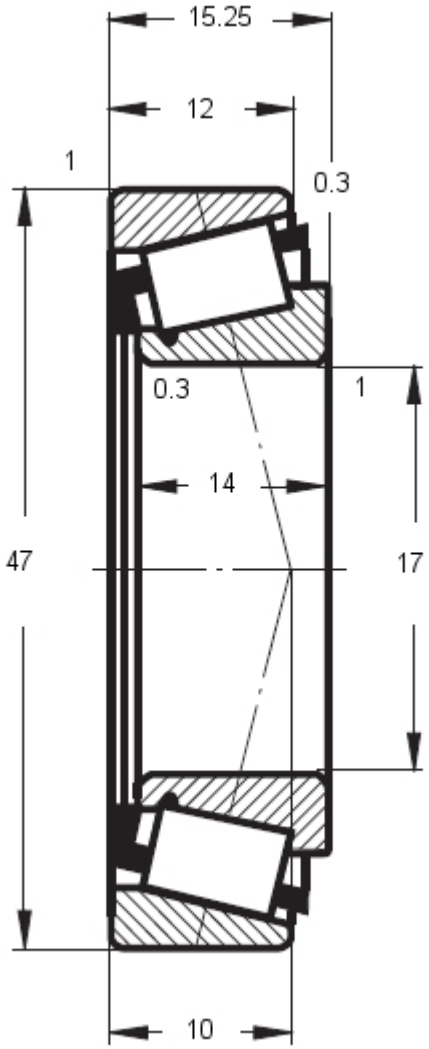
symbol	30303A
inner diameter d [mm]	17
outer diameter D [mm]	47
height B, T, H [mm]	15.25
mass [kg]:	0.13
basic load rating (dynamic)	26
basic load rating (static)	25.7
limiting speeds (grease)	8500
limiting speeds (oil)	12000