Product description

symbol: 32009XA
Category: Single - row metric size

Technical data
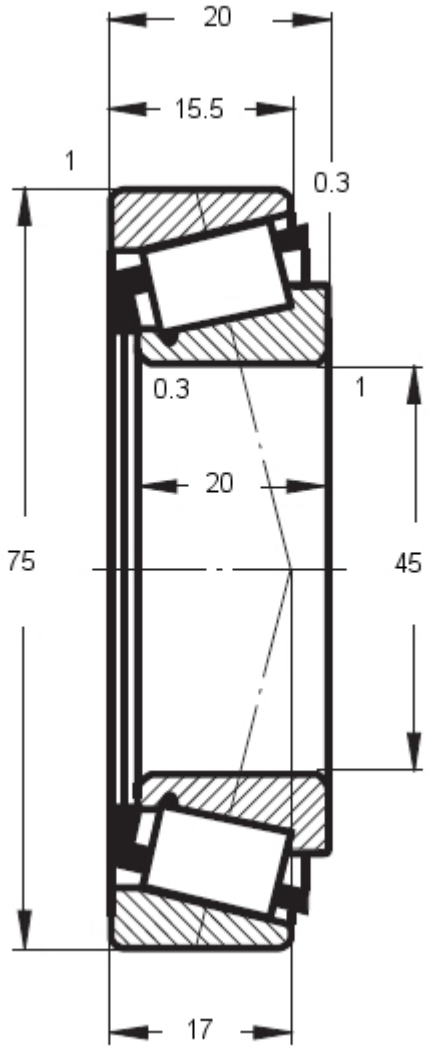
symbol	32009XA
inner diameter d [mm]	45
outer diameter D [mm]	75
height B, T, H [mm]	20
mass [kg]:	0.34
basic load rating (dynamic)	58.4
basic load rating (static)	81.4
limiting speeds (grease)	4800
limiting speeds (oil)	6300