Product description

symbol: 32013X
Category: Single - row metric size

Technical data
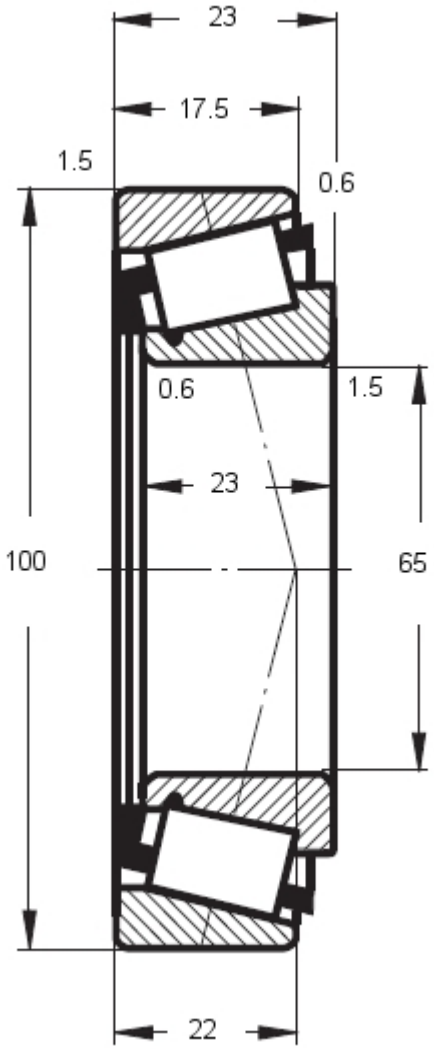
symbol	32013X
inner diameter d [mm]	65
outer diameter D [mm]	100
height B, T, H [mm]	23
mass [kg]:	0.63
basic load rating (dynamic)	84.2
basic load rating (static)	127
limiting speeds (grease)	3400
limiting speeds (oil)	4500