Product description

symbol: 33116A
Category: Single - row metric size

Technical data
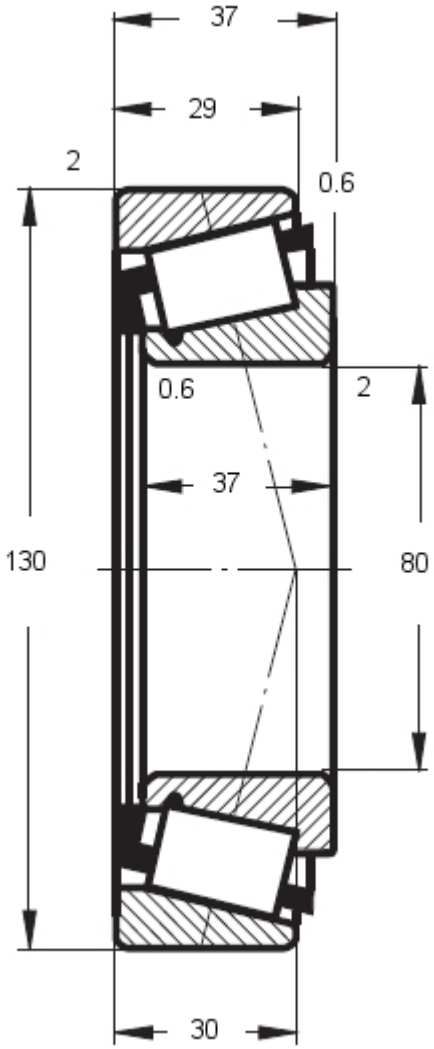
symbol	33116A
inner diameter d [mm]	80
outer diameter D [mm]	130
height B, T, H [mm]	37
mass [kg]:	1.6
basic load rating (dynamic)	181
basic load rating (static)	317
limiting speeds (grease)	2600
limiting speeds (oil)	3600