Product description

symbol: 32316A
Category: Single - row metric size

Technical data
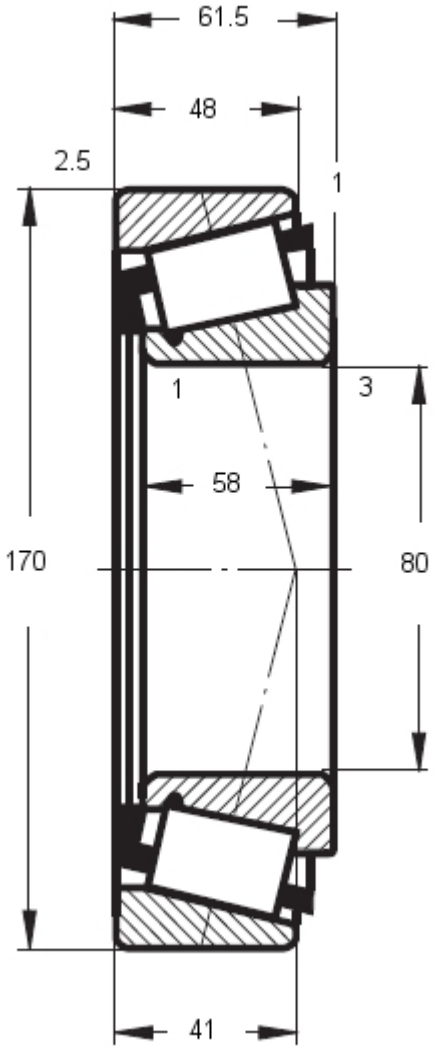
symbol	32316A
inner diameter d [mm]	80
outer diameter D [mm]	170
height B, T, H [mm]	61.5
mass [kg]:	5.9
basic load rating (dynamic)	378
basic load rating (static)	545
limiting speeds (grease)	1900
limiting speeds (oil)	2800