Product description

symbol: 32017X
Category: Single - row metric size

Technical data
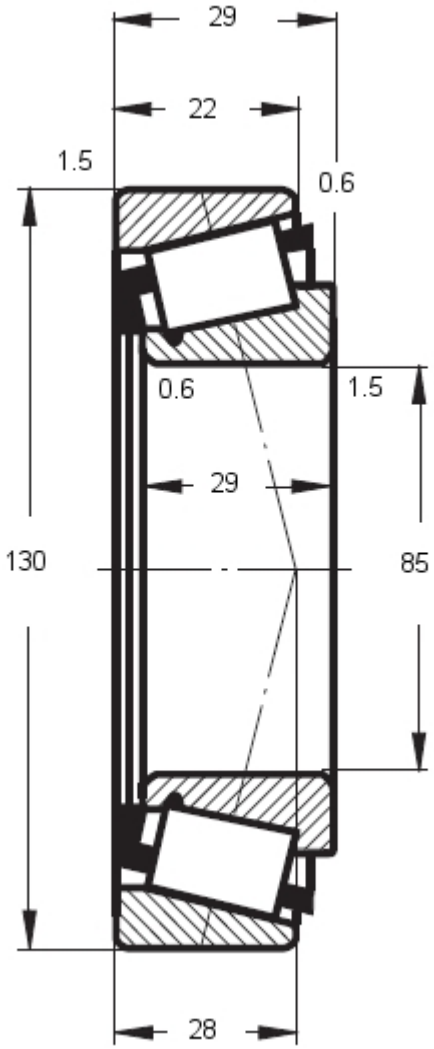
symbol	32017X
inner diameter d [mm]	85
outer diameter D [mm]	130
height B, T, H [mm]	29
mass [kg]:	1.32
basic load rating (dynamic)	139.8
basic load rating (static)	220.3
limiting speeds (grease)	2600
limiting speeds (oil)	3600