Product description

symbol: 33217A
Category: Single - row metric size

Technical data
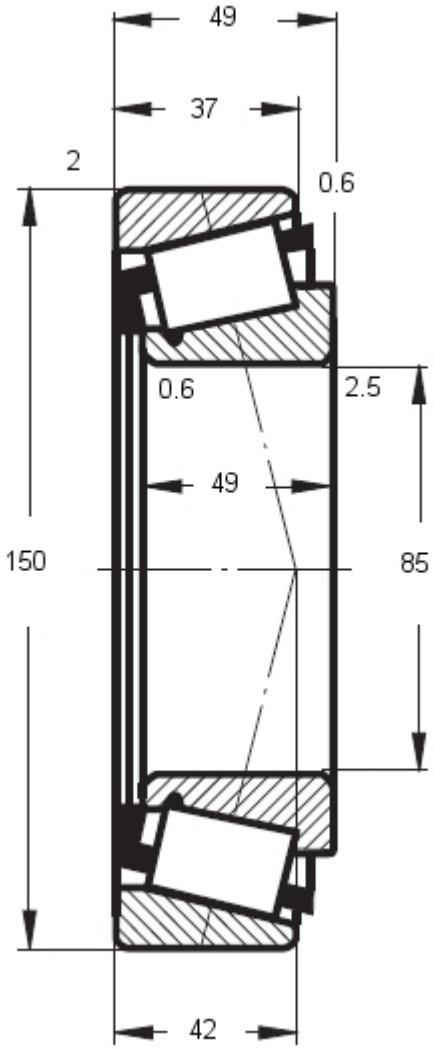
symbol	33217A
inner diameter d [mm]	85
outer diameter D [mm]	150
height B, T, H [mm]	49
mass [kg]:	3.67
basic load rating (dynamic)	296
basic load rating (static)	444
limiting speeds (grease)	2200
limiting speeds (oil)	3200