Product description

symbol: 33019A
Category: Single - row metric size

Technical data
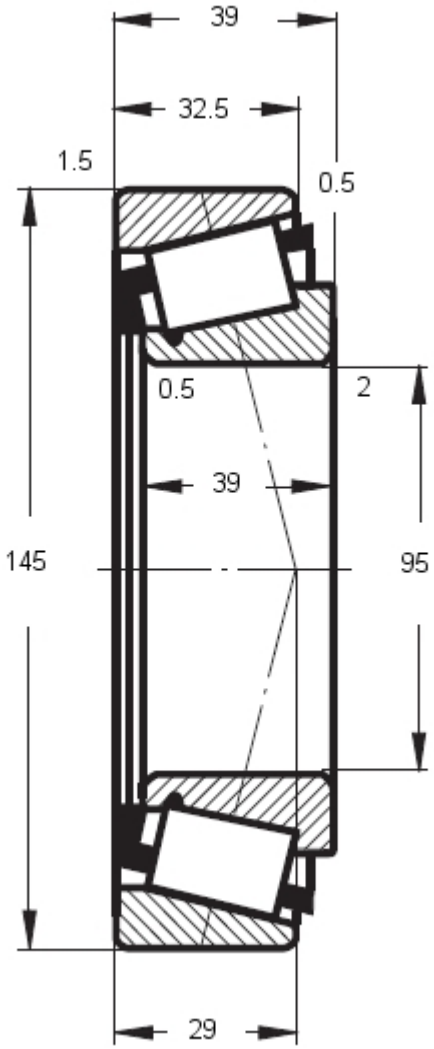
symbol	33019A
inner diameter d [mm]	95
outer diameter D [mm]	145
height B, T, H [mm]	39
mass [kg]:	2.26
basic load rating (dynamic)	231
basic load rating (static)	390
limiting speeds (grease)	2200
limiting speeds (oil)	3200