Product description

symbol: 32040X
Category: Single - row metric size

Technical data
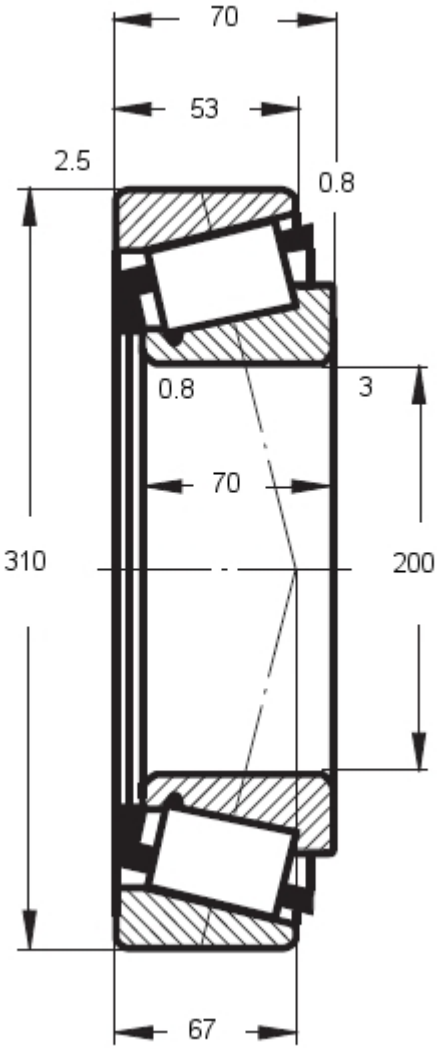
symbol	32040X
inner diameter d [mm]	200
outer diameter D [mm]	310
height B, T, H [mm]	70
mass [kg]:	19.1
basic load rating (dynamic)	720
basic load rating (static)	1400
limiting speeds (grease)	900
limiting speeds (oil)	1200