# Product description

symbol: 32944
Category: Single - row metric size

Technical data
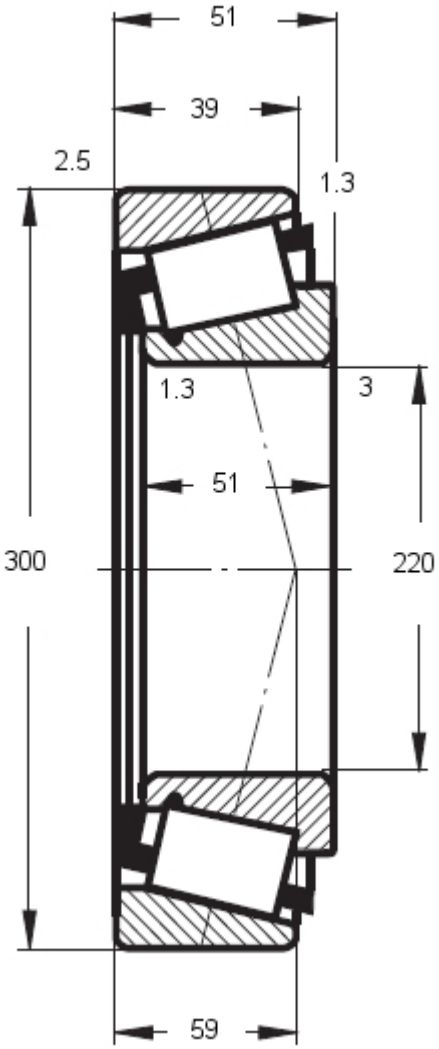
| | |
|---|---|
| symbol | 32944 |
| inner diameter d [mm] | 220 |
| outer diameter D [mm] | 300 |
| height B, T, H [mm] | 51 |
| mass [kg]: | 10.1 |
| basic load rating (dynamic) | 448 |
| basic load rating (static) | 911 |
| limiting speeds (grease) | 1000 |
| limiting speeds (oil) | 1500 |