Product description

symbol: 32044X
Category: Single - row metric size

Technical data
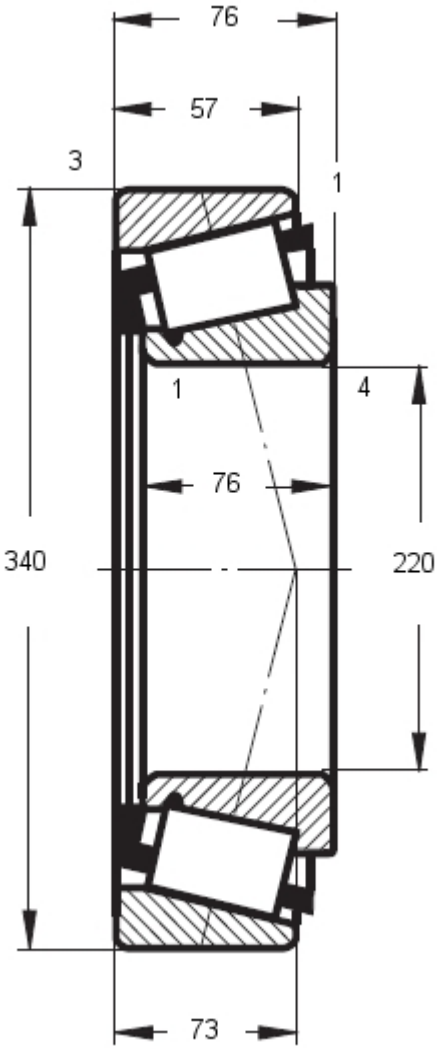
symbol	32044X
inner diameter d [mm]	220
outer diameter D [mm]	340
height B, T, H [mm]	76
mass [kg]:	24.7
basic load rating (dynamic)	850
basic load rating (static)	1660
limiting speeds (grease)	950
limiting speeds (oil)	1400