Product description

symbol: 32048X
Category: Single - row metric size

Technical data
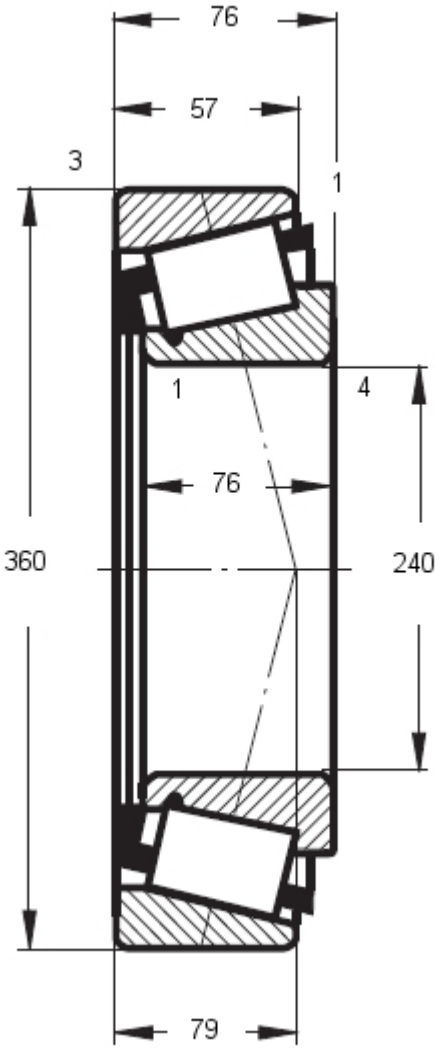
symbol	32048X
inner diameter d [mm]	240
outer diameter D [mm]	360
height B, T, H [mm]	76
mass [kg]:	26.2
basic load rating (dynamic)	671
basic load rating (static)	1610
limiting speeds (grease)	850
limiting speeds (oil)	1200