Product description

symbol: 515-822
Category: Special and inch size

Technical data
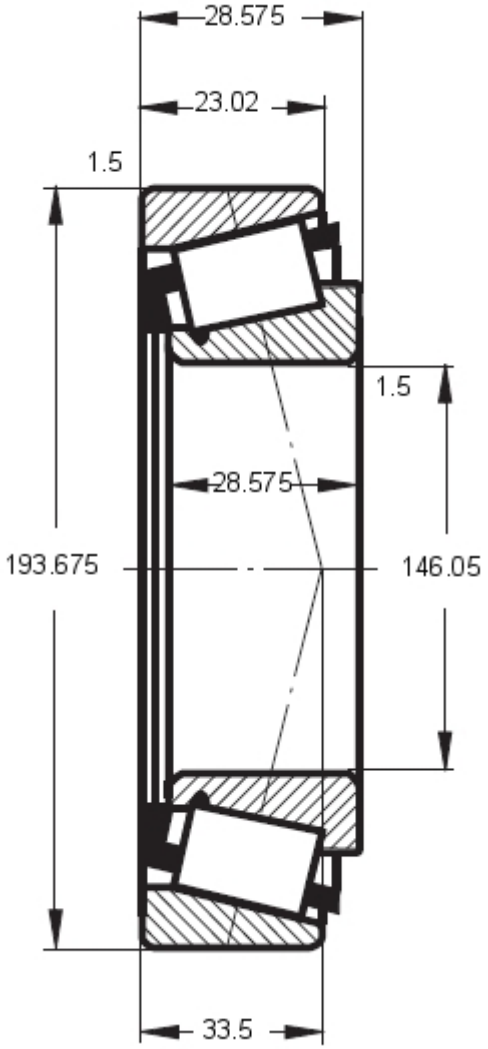
symbol	515-822 36690/36620
inner diameter d [mm]	146.05
outer diameter D [mm]	193.675
height B, T, H [mm]	28.575
mass [kg]:	2.33
basic load rating (dynamic)	168
basic load rating (static)	352
limiting speeds (grease)	1600
limiting speeds (oil)	2200