Product description

symbol: 22315CA
Category: FLT Spherical roller bearings

Technical data
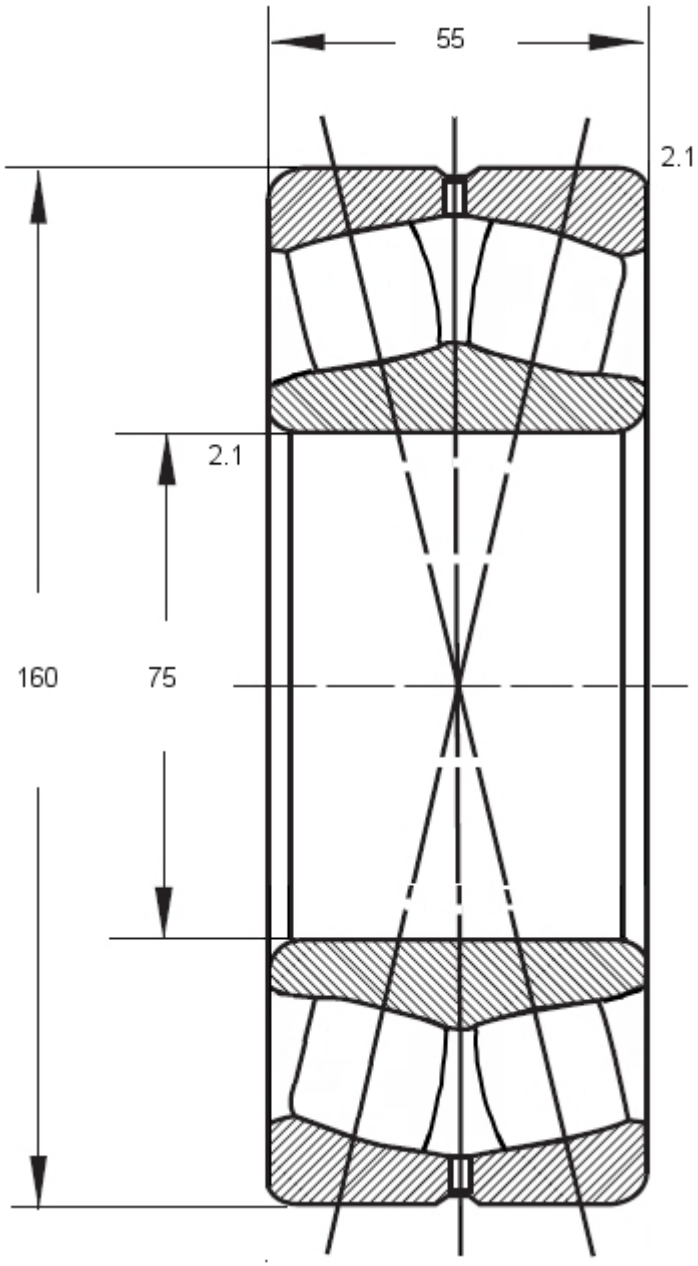
symbol	22315CA 5,89
inner diameter d [mm]	75
outer diameter D [mm]	160
height B, T, H [mm]	55
mass [kg]:	5.89
basic load rating (dynamic)	365
basic load rating (static)	451
limiting speeds (grease)	2600
limiting speeds (oil)	3200