Product description

symbol: 23030MBK
Category: FLT Spherical roller bearings

Technical data
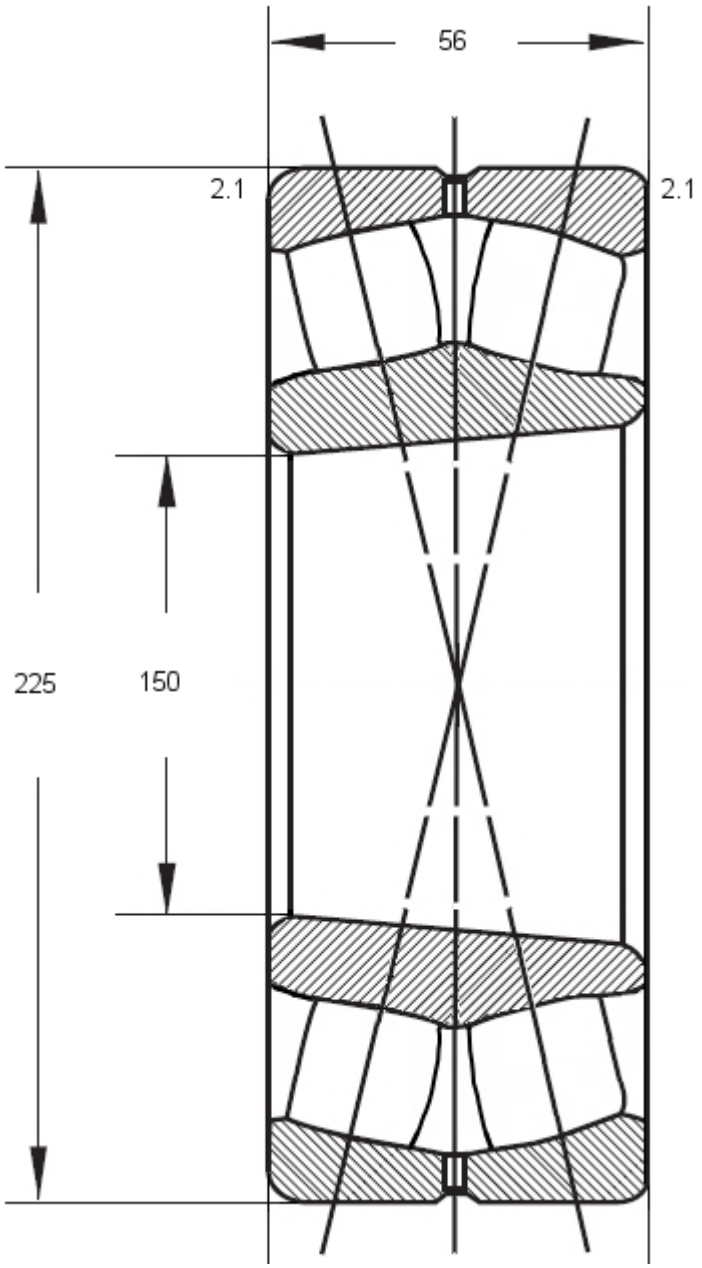
symbol	23030MBK 8,19
inner diameter d [mm]	150
outer diameter D [mm]	225
height B, T, H [mm]	56
mass [kg]:	8.19
basic load rating (dynamic)	338
basic load rating (static)	790
limiting speeds (grease)	900
limiting speeds (oil)	1200