Product description

symbol: 32034X
Category: Single - row metric size

Technical data
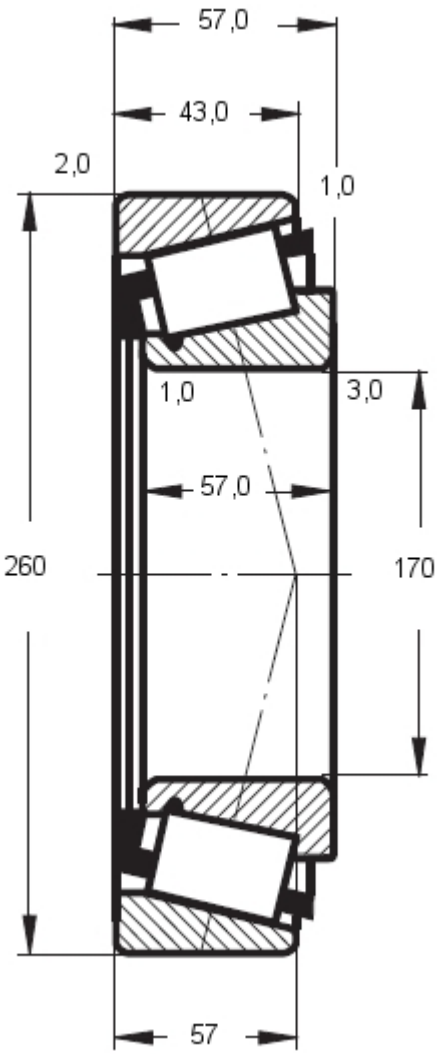
symbol	32034X
inner diameter d [mm]	170
outer diameter D [mm]	260
height B, T, H [mm]	57
mass [kg]:	10.6
basic load rating (dynamic)	465,0
basic load rating (static)	800,0
limiting speeds (grease)	1200
limiting speeds (oil)	1700